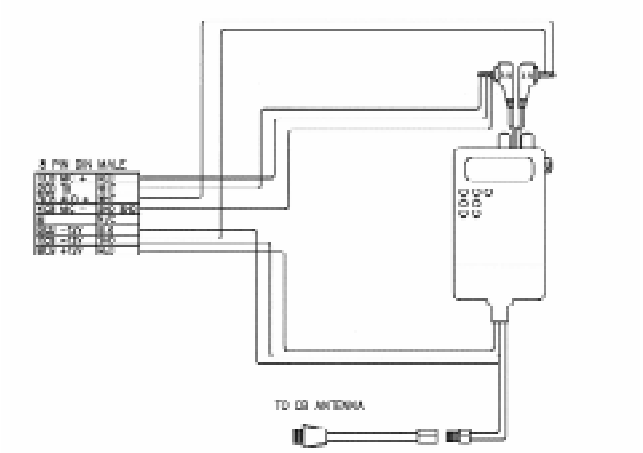

Part # 99 99 0 000 196
ComSystem CB Wire Diagram